UDC 622.243.051

T. N. MENDEBAEV [1], *Chief Researcher, Doctor of Engineering Sciences*
N. Zh. SMASHOV [1], *Chief Executive Officer, Candidate of Engineering Sciences*
M. Zh. KUATOVA [2], *Post-Graduate Student, kuatova.moldyr@gmail.com*

[1] *LLP Scientific Innovation Center Almas, Almaty, Kazakhstan*
[2] *Al-Farabi Kazakh National University, Almaty, Kazakhstan*

WATER JET DESTRUCTION OF ROCKS IN WELL DRILLING BY DIAMOND TOOLS WITH INDEPENDENT FLUSHING PORTS

The key problems in deep drilling are preservation of the preset well direction, reduction of energy consumption, production of high-quality geological material in the form of core and improvement of rock-breaking tool performance. This paper reviews the research works aimed at solving these problems. These studies mainly deal with design features, implementation and working conditions of diamond drill bits which are the most popular in well drilling. It is found that well deflection depends on the method of drilling, on the shape of the diamond bit matrix and on the axial load applied to it. The practice proves that stead-state path of well drilling is possible with making annular channels on the bottom face of the tool matrix. The use of potential energy of fluids to break rocks is one of the ways of solving the deep well drilling problems, which is highlighted in some of the research works. The most promising facilities are the bottom-hole assembly with hydraulic control valve and thin-walled diamond bits, hydraulic units with renewable bottom-hole energy source and rock destruction by water jets. The novelty of the latter approach is presented in the structural diagram of the diamond tools consisting of a matrix with annular channels on the bottom face divided into sectors by flushing slots, and with axial holes coming to the annular channels. The flushing slots have partitions, the bottom and sidewalls of the annular channels have parallel grooves extending to the flushing slots oppositely to the tool rotation. This structural layout ensures separate flush fluid feed and mud removal, volumetric destruction of rocks by fluid jets and cooling of the tool. The industrial tests of the prototype diamond tools show that they offer higher well drilling efficiency as against the series-produced HQ type bits.

Keywords: *geology, rock, drilling, well, diamond, tool, device, fluid, jet, destruction.*
DOI: *10.17580/em.2019.02.09*

Introduction

The irreversible trend of increasing depth of well drilling in the world, expansion of the application range of wells due to switching to borehole methods of mineral extraction, development of geothermal fields and advancement in wind power engineering requires the system approaches to deep drilling. The most significant problems are preservation of well drilling path, production of informative geological material and improvement of bottom-hole working conditions for rock-cutting tool bits [1].

The compliance of properties of rock-cutting tools and rock mass determines the penetration efficiency of diamond drilling [2, 3]. With increasing jointing of rocks, the capacity of diamond bits lowers, and the capacity drop is more intensive in hard rather than in softer rocks.

The experience of operation of diamond rock-cutting tools in a wide range of geological conditions has demonstrated that the shape of the tool matrix significantly influences deviation of wells from the preset path. For example, during full-face drilling, without core sampling and under high axial loads, wells, as a rule, deflect to the right in the direction of bit rotation [4]. For the stability of the well straightness in the full-face drilling, the end surface of the drill bit matrix is made with concentric sockets and projections (crests), which perceive the dynamic load from the bit rotation and counteracts the bit deflection momentum. During drilling with core sampling, the core rigidly connected with the well bottom centers the tool. In order to strengthen the connection in this technology [5], flushing channels are made on the bottom face of the matrix, with their rounded turn segment made oppositely to the diamond bit rotation and hydraulically connected with the annular grooves with unidirectional outlet.

There exist drill bits with internal axial channels to let the flush fluid outside the core formation zone [6]. This form of the flushing system improves the core quality and increases the core recovery even in jointed rocks. However, such flushing system permits mixing of fed fluid flow and mud removal flow, which reduces the force of rock destruction and fails to ensure volumetric cooling of the matrix and complete removal of the drill mud.

The study [7] presents information on the features of the diamond bit structure, shape of the matrix and parameters of diamond bits, which, jointly, have increased the operational life and penetration rate of the tool in deep well drilling in hard rocks.

The traditionally facilities for obtaining structurally intact core are the equipment with removable inner barrel (core receiver) such as NQ or HQ. Their disadvantages are the intensive well curvature and high energy input due to high axial loads on the diamond bit with increased area of the matrix. Moreover, they have limited drilling diameter of up to 95.6 mm, often less than 122 mm.

In [8] the authors propose the bottom-hole assembly with a hydraulic control valve and diamond bits with thinner matrix. This assembly ensures preservation of the core and excludes its abrasion in the core barrel. The assembly can

be used in drilling various purpose wells with diameter of 46 mm to 325 mm and more.

The optimized number of diamonds in the matrix and the penetration depth of diamond bits depending on the axial load are calculated in [9].

We can see some developments in the field of water jet destruction of rocks during drilling of wells and blast-holes in open pit mineral mining in the last decades [10, 11]. In this case, water jets assist rock fragmentation, and penetrability of rocks has a great influence on the efficiency of destruction. The experiments have found that in dense rocks, water jet can increase the degree of fragmentation if cracks and holes are made in advance on the rock surface using other tools. Researchers highlight capacities of water jet to cool the tool, and to reduce the tool loading and wear.

In water jet destruction of rocks, a promising direction is a hydraulic device with a renewable bottom-hole source of energy [12]. The idea is to create the renewable bottom-hole energy source in the form of hydraulic impacts generated by flush fluid at the contact with rock being broken. This allows significant reduction in the values of the axial load and rotation frequency of the rock-cutting tool, thereby eliminating the main causes of well deflection and high energy inputs.

Description

In order to effectively use the potential energy of the flush fluid while drilling deep wells, we propose the structural diagram which contains a matrix with annular channels on the bottom face divided by flushing slots into sectors, and with axial holes coming out to the matrix bottom face.

The tool (**Fig. 1**) contains a body (not shown) attached with diamond matrix *1* with annular channels *2* on the bottom face divided into sectors by flushing slots *3* and axial holes *4*. Flushing slots *3* have partitions *5*; axial holes *4* come out to the bottom face of matrix *1* from the back side of partition *5* and are hydraulically connect to annular channels *2* arranged chequerwise with horizontal shift between the sectors. Grooves *6* and *7* are made on the bottom and side walls of the channels in parallel to the flushing slots oppositely to rotation of the tool (See **Fig. 1**).

The principle of the diamond rock-cutting tool is as follows: as drilling begins with rotation of the tool and with flushing fluid feed, flows along axial holes *4* go from the back side of partition *5* directionally under the bottom of matrix *1*, penetrate into rocks and form the advanced prefracture zones under the force of dynamic pressure. Some portion of the flush fluid cools the bottom end of matrix *1* and flows with mud along annular channels *2* to the flushing slots oppositely to the tool rotation. The other portion of the flow in the periphery of the matrix *2* from the back side of partition *5* also removes mud to flushing slots *3*. Partition *5* divides the flush fluid and makes it flow through holes *4* and remove mud through flushing slots *3*. In addition, the flush fluid flows in grooves *6* and *7* for the volumetric destruction of the rock crests in annular channels *2* in the horizontal plane. This excludes blocking of the flush fluid under the bottom face of matrix *1* and prevents obstruction of the mud pump operation. The improved system of the flushing ports in the design of the diamond rock-cutting tool provides high-quality geological material in the form of a solid core, maximizes capacities of the flush fluid in destruction of rocks, cools the matrix and removes mud. At the same time, the energy of the flush fluid grows with increasing depth of wells due to the liquid column weight, whereby the negative factor—higher energy input with drilling depth—becomes positive.

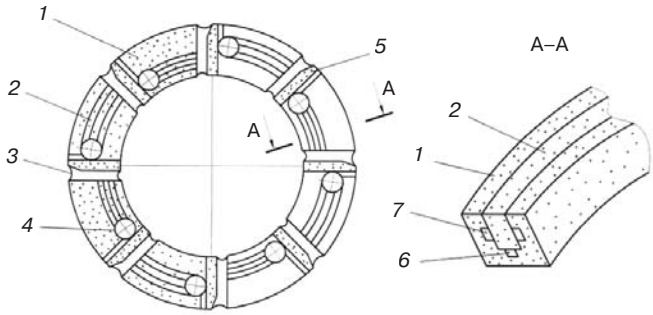

Fig. 1. Diamond rock-cutting tool with independent flushing ports:
1 — matrix, *2* — annular channels; *3* — flushing slots; *4* — axial holes; *5* — partitions; *6* and *7* — grooves

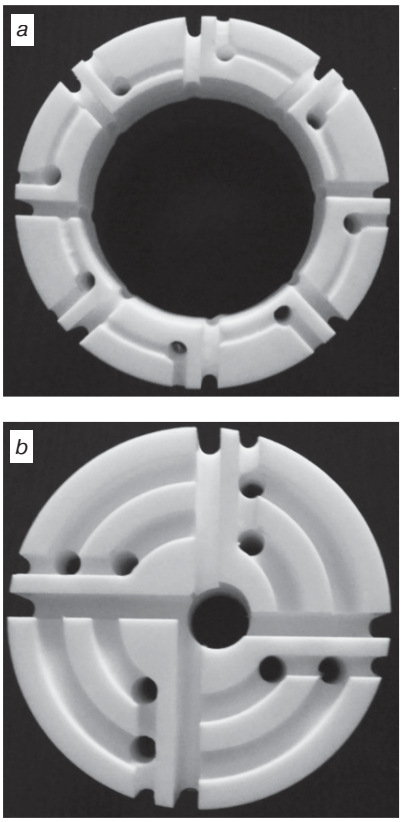

Fig. 2. Matrix of prototype sample of diamond rock-cutting tool with independent flushing ports for drilling wells:
a — with core sampling; *b* — for full-face drilling

Tool	Penetration rate, m/h	Energy input, kWh/m	Drilling mode	
			Axial load	Rotation frequency, min^{-1}
Series-produced HQ (95.6/63.5)	4.0–5.0	1.4–1.8	1200–1500	500–700
Prototype sample of diamond rock-cutting tool with independent flushing ports	3.3–4.1	1.0–1.2	800–1000	400–500

Industrial tests and conclusions

The diamond rock-cutting tool, based on the structural diagram, was designed for drilling wells with core sampling and for full-face drilling (**Fig. 2**).

The industrial tests of the prototype diamond rock-cutting tools (drill bits) with a standard outer diameter of 95.6 mm were carried out at the site Aksoran (Central Kazakhstan). The exploration object was tungsten ore manifestation. The geological section was composed of monolithic and low-abrasive porphyroids and skarns of drillability category 10. The test interval was 40–400 meters. In order to improve reliability of the comparative results achieved by the prototype tools with core sampling and by series-produced drill bits HQ, the tools were used in turns in the commensurable geological conditions of drilling.

Comparative results of testing of prototype diamond rock-cutting tools with independent flushing ports and series-produced HQ

It follows from the comparison data in the **table** that the prototype diamond rock-cutting tools with independent flushing ports have a noticeable advantage in terms of the energy input and drilling mode as against the series-produced drill bits.

According to the drilling personnel of the geological organization implementing the tests, the prototype tools were the effective energy-saving facilities for drilling wells in hard and very strong rocks. Taking into account these recommendations, the research is underway to improve the design and to study the tool capacities and influences on well deflection, especially in full-face drilling, in joint operation with a downhole hydraulic machine meant for drilling for oil, gas and groundwater.

The design features and technological capabilities enable the diamond rock-cutting tools with independent flushing ports to be an effective and integrated solution to deep well drilling problems.

The study was supported by the Committee of Sciences of the Ministry of Education and Science of the Republic of Kazakhstan, Grant Financing Agreement No. 106 as of March 5, 2018.

References

1. Simonyants S. L., Mnatsakinov I. V. Relevant direction in modernization of turbine method of drilling. *Nefteservis.* 2013. No. 2. pp. 48–50.
2. Gorelikov V. G. Structural features of diamond bits for jointed rock drilling. *Zapiski Gornogo instituta*. 2012. Vol. 197. pp. 29–33.
3. Available at: https://neftegaz.ru/science/Oborudovanie-uslugi-materialy/331560-almaznye-koronki-novogo-pokoleniya/ (accessed: 30.08.19).
4 Romanov V. L., Gorshkov L. K., Selivanov A. N. The technology of drilling diamond bits in the curvature of exploration wells with continuous deflectors. *Research, development and implementation of diamond drilling technology for solid minerals : Collected papers*. Moscow : Geotekhnika, 2004. pp. 105–112.
5. Mendebaev T. N. Core barrel. Patent RF, No. 2613458. Published: 22.09.17. Bulletin No. 27.
6. Maslennikov I. K., Matveev G. I. Tool for drilling wells : Reference book. Moscow: Nedra, 1981. pp. 268-271.
7. Jia Meiling, Cai Jiapin, Ouyang Zhiyong, Shen Lina, Wu Haixia, Li Chun. Design & application of diamond bit to drilling hard rock in deep borehole. *Procedia Engineering.* 2014. Vol. 73. pp. 134–142.
8. Mendebaev T. N., Izakov B. K., Kalambaeva A. S. Resource-saving technology of well drilling with bottomhole assembly with a hydrodistributor and thin-wall diamond crowns. *Razdedka i okhrana nedr.* 2018. No. 3. pp .41–43.
9. Lykov Y. V., Gorelikov V. G., Baatarkhuu Gantulga. Analytical research and classification of mechanism of diamond drilling-bits contact with rocks during well sinking. *IOP Conf. Ser.: Earth and Environmental Science.* 2017. Vol. 87. 022012. DOI: 10.1088/1755-1315/87/2/022012.
10. Yiyu Lu, Jiren Tang, Zhaolong Ce, Binwei Xia, Yong Liu. Hard rock drilling technique with abrasive water jet assistance. *International Journal of Rock Mechanics & Mining Sciences*. 2013. Vol. 60. pp. 47–56.
11. Reinsch T., Paap B., Hahn S., Wittig V., van den Berg S. Insights into the radial water jet drilling technology – Application in a quarry. *Journal of Rock Mechanics and Geotechnical Engineering*. 2018. Vol. 10. pp. 236–248.
12. Mendebaev T. N., Smashov N. Zh., Ismailov Kh. K., Izakov B. K. Hydrodevice with a renewable bottom-hole source of energy for well drilling. *Razvedka i okhrana nedr*. 2017. No. 4. pp. 36–39. EM